westfalia AUTOMOTIVE

siarr WESTFALIA AUTOMOTIVE

542169700001 - 542178700001 - 542179700001
542089700001 - 542090700001 - 542180700001
542169700051 - 542178700051 - 542179700051
542089700051 - 542090700051 - 542180700051

IVECO DAILY 05/1999 >

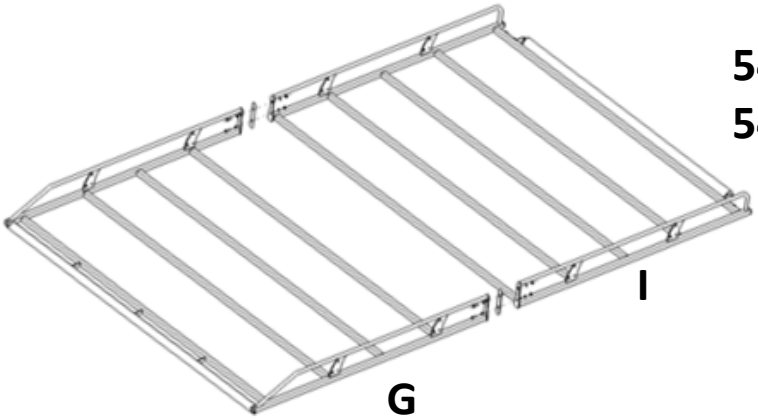

542169700001
542169700051
L1 H1

542180700001
542180700051
L1 H2

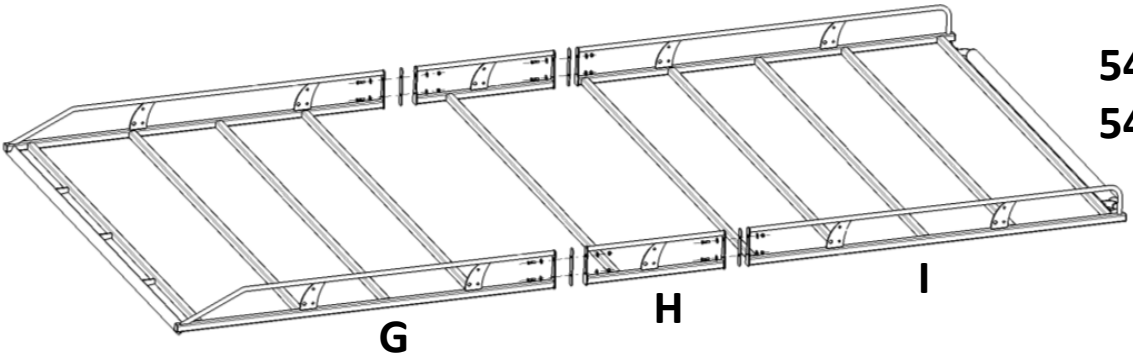

542179700001
542179700051
L2 H1

542089700001
542089700051
L3 H2

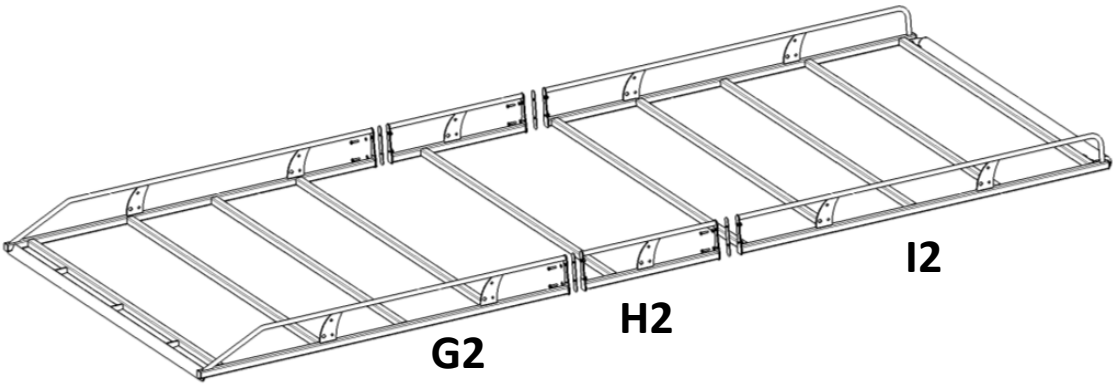

542178700001
542178700051
L2 H2

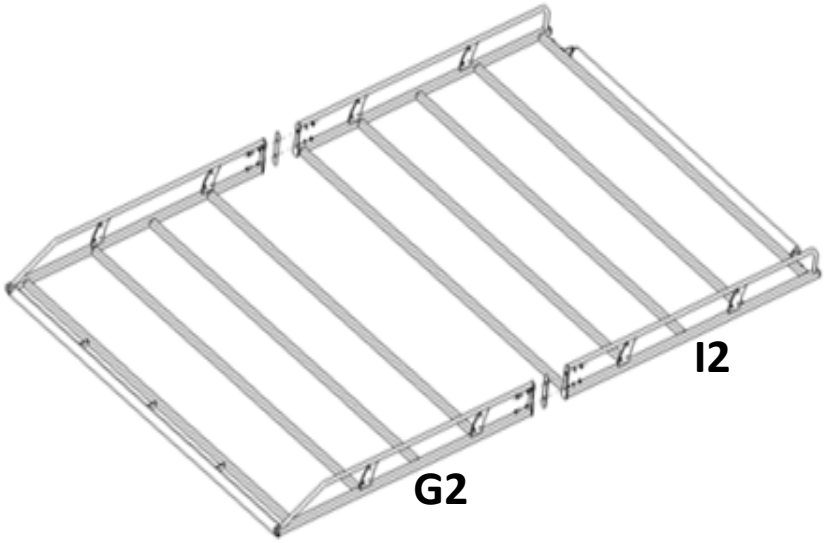

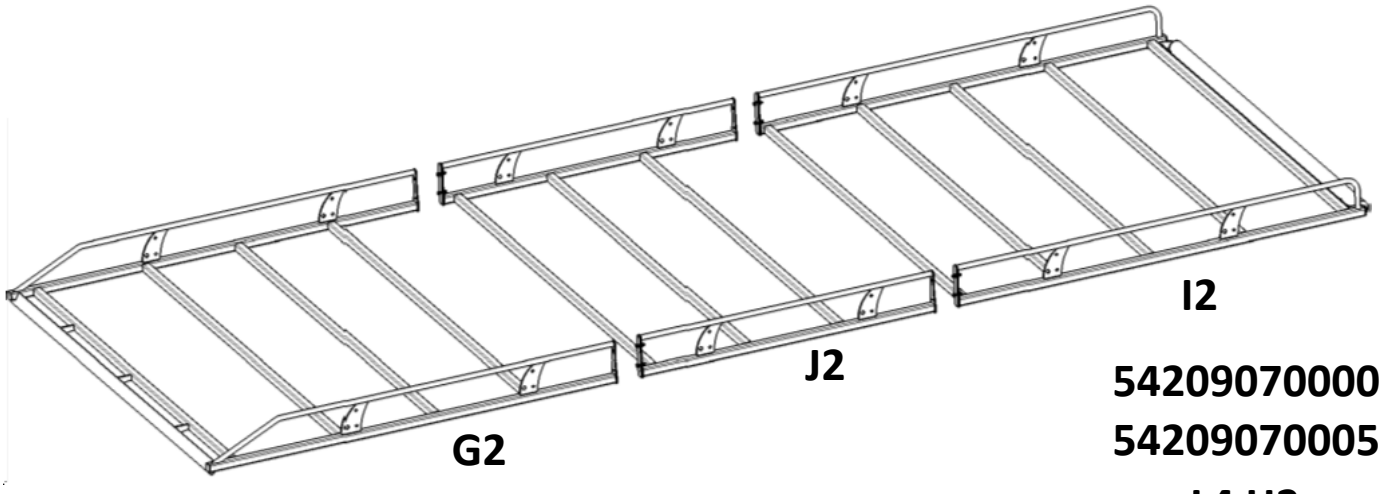

542090700001
542090700051
L4 H2

G + I = 500002702003
G2 + I2 = 500002703003
J1 = 500001702006
J2 = 500001701006
H1 = 500001701005
H2 = 500001701006

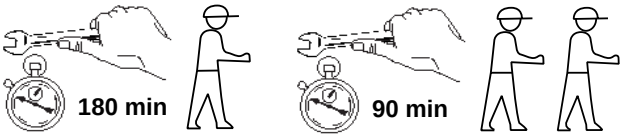

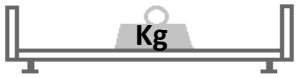

L1H1 = 200 Kg
L1H2 = 100 Kg
L2H1 = 100 Kg
L2H2 = 190 Kg
L3H2 = 90 Kg
L4H2 = 75 Kg

D
HM 8 x 20 Cl 8.8 20 Nm
CS 8 x 22

B
HM 8 x 20 Cl 8.8 20 Nm
L 8 x 18

Z
HM 8 x 20 Cl 8.8 20 Nm
L 8 x 18

C
HM 12 x 50 Cl 8.8 81 Nm
CS 12
M12 Cl 8
45 x 40 x 10

F
HM 8 x 60 Cl 8.8 23 Nm
CS 8 x 22

X
HM 6 x 25 Cl 8.8 9 Nm
L 6 x 18
M6 Cl 8

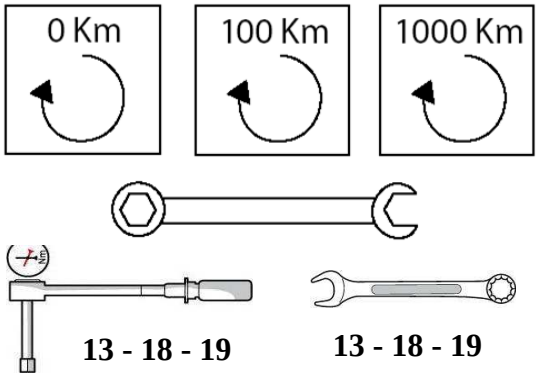

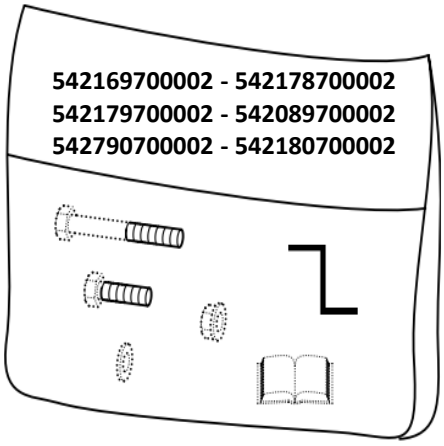

1

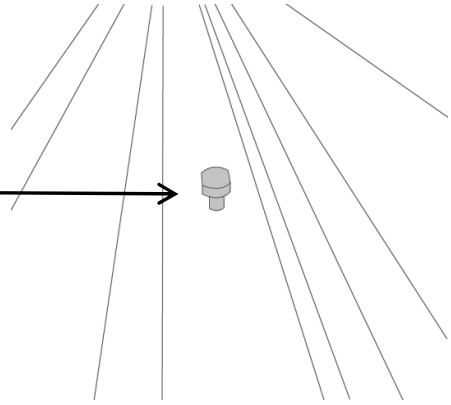

F HM 8 x 60 Cl 8.8
CS 8 x 22

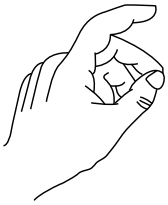

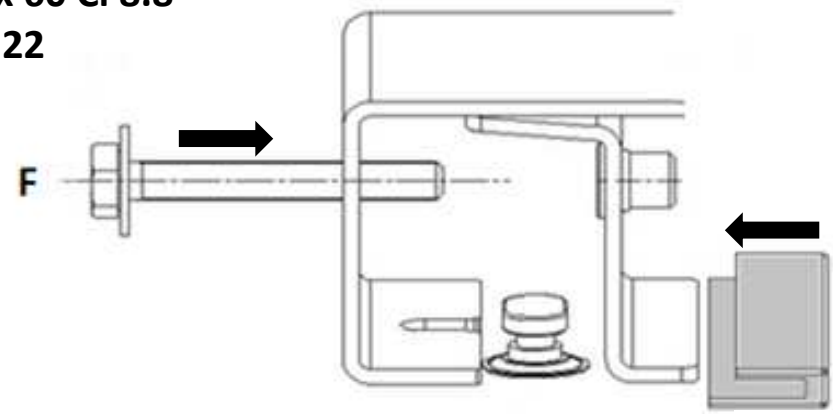

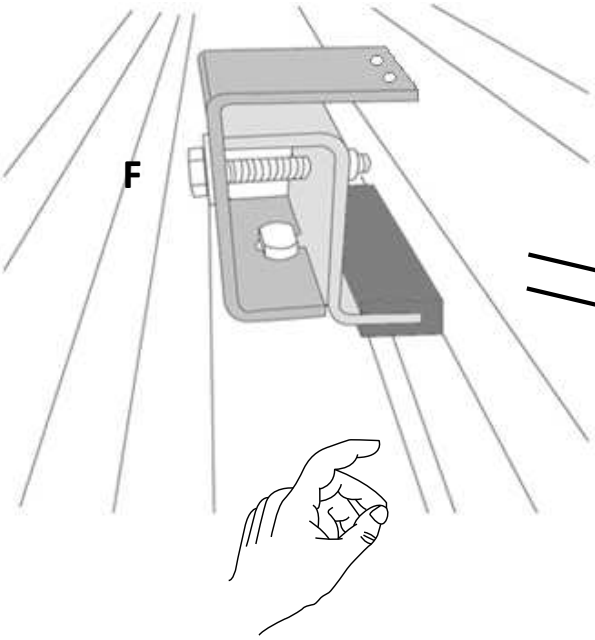

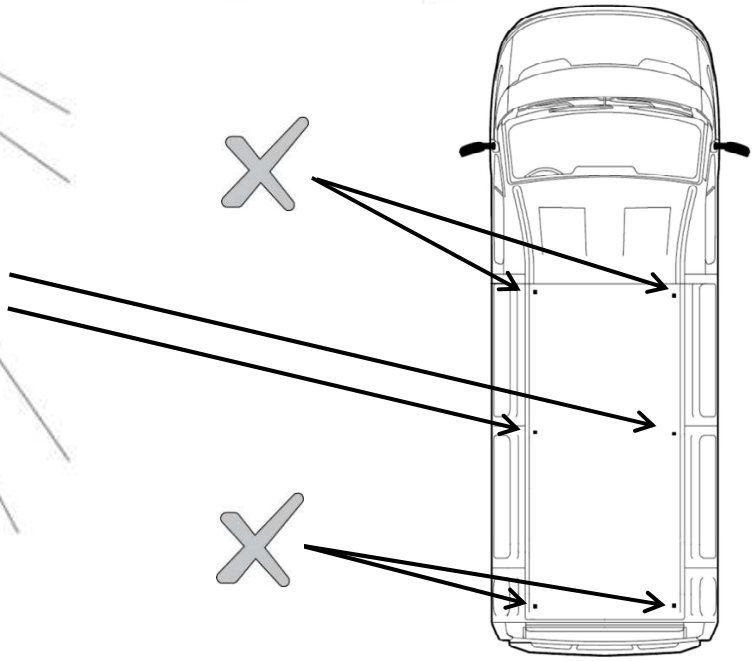

2

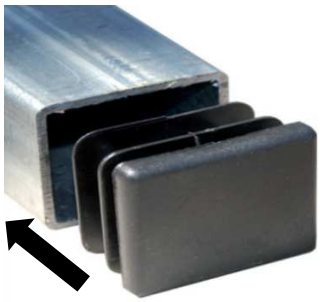

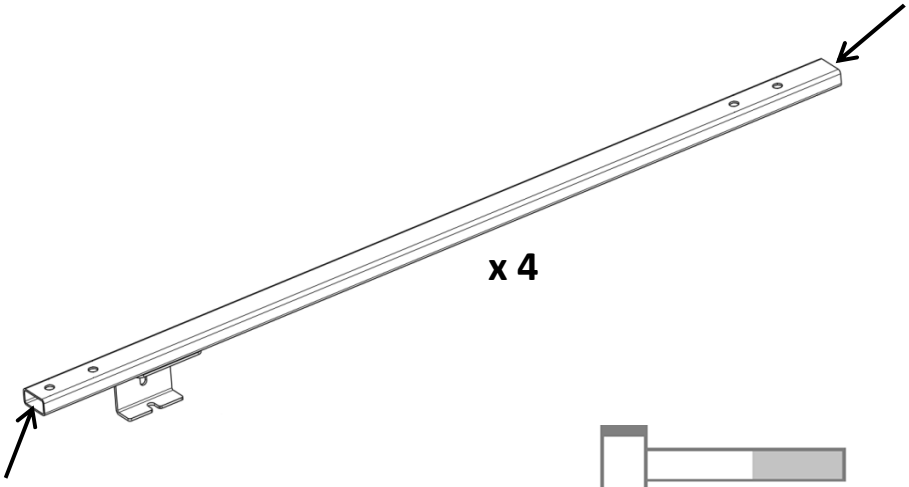

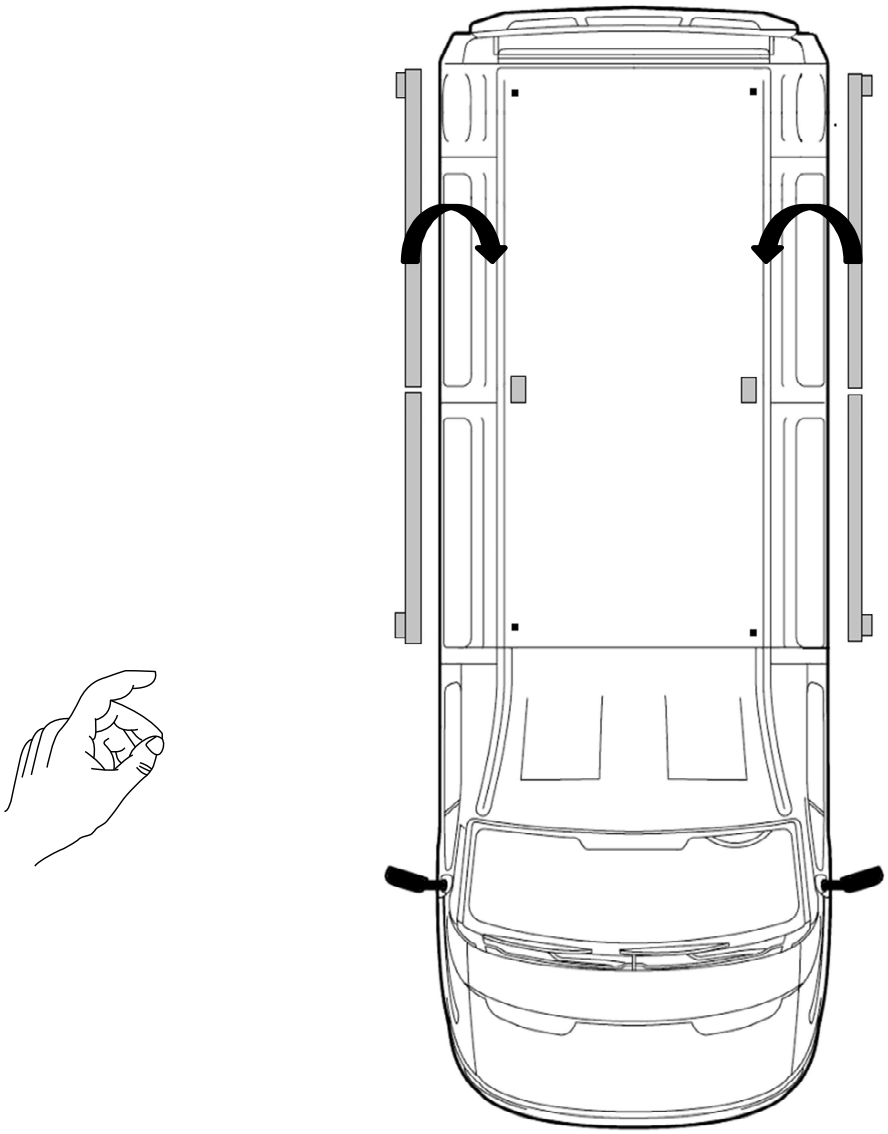

F **HM 8 x 60 Cl 8.8**
CS 8 x 22

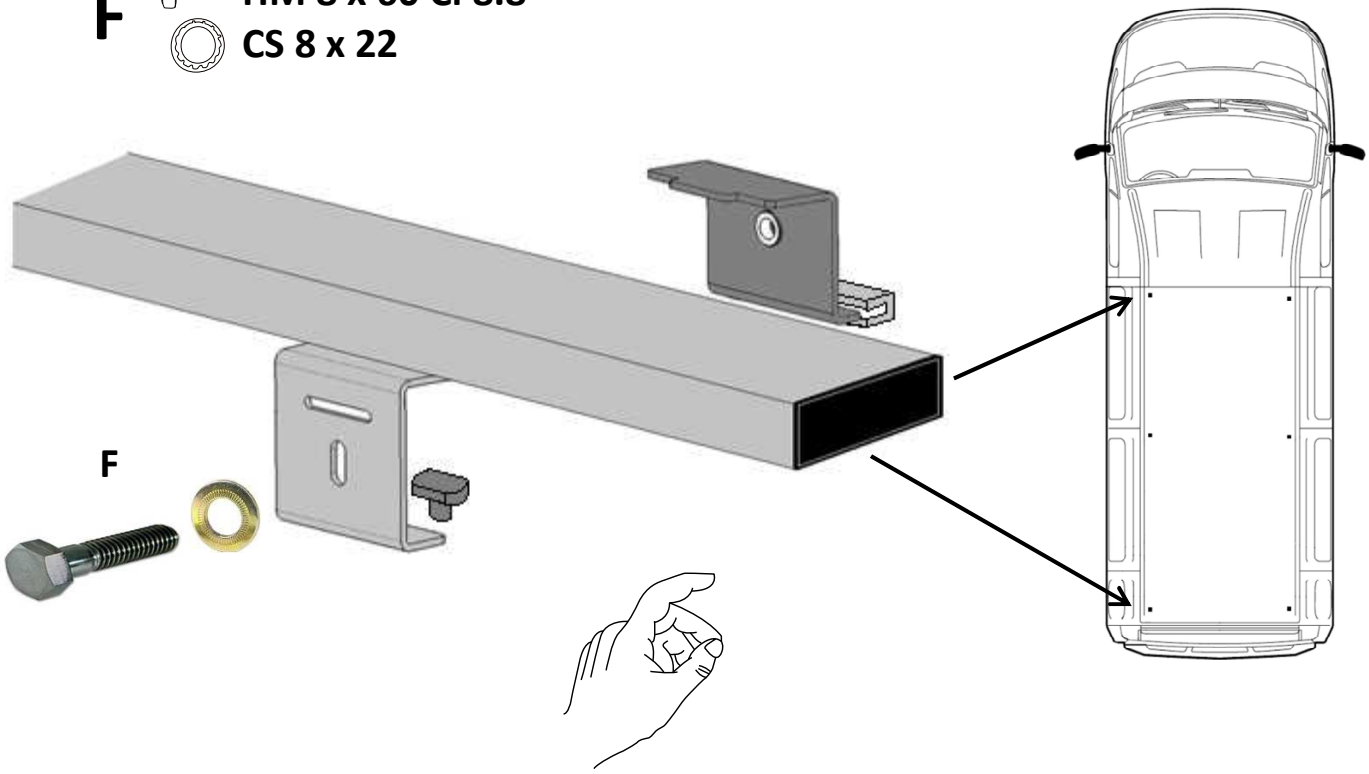

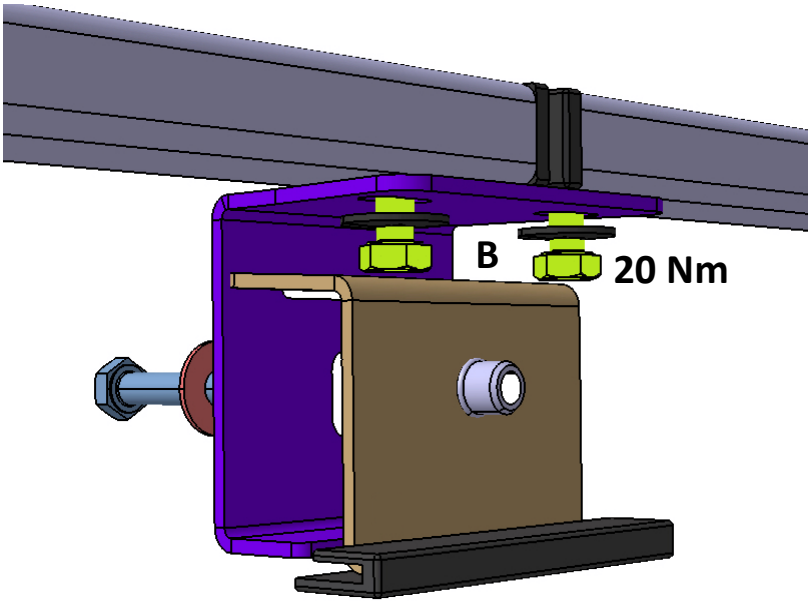

13 20 Nm

B

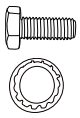

4 HM 8 x 20 Cl 8.8 20 Nm

4 CS 8 x 22

3

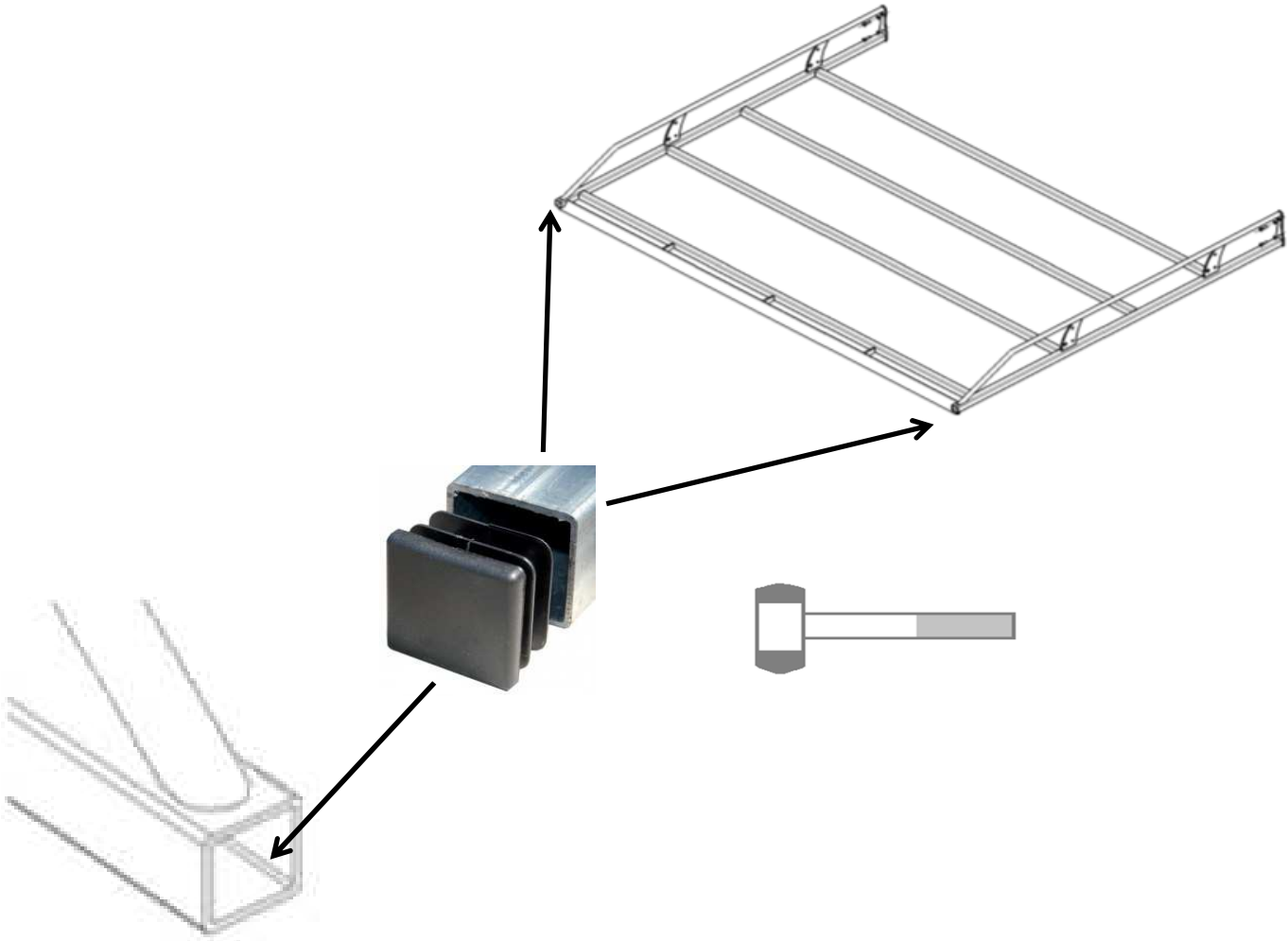

4

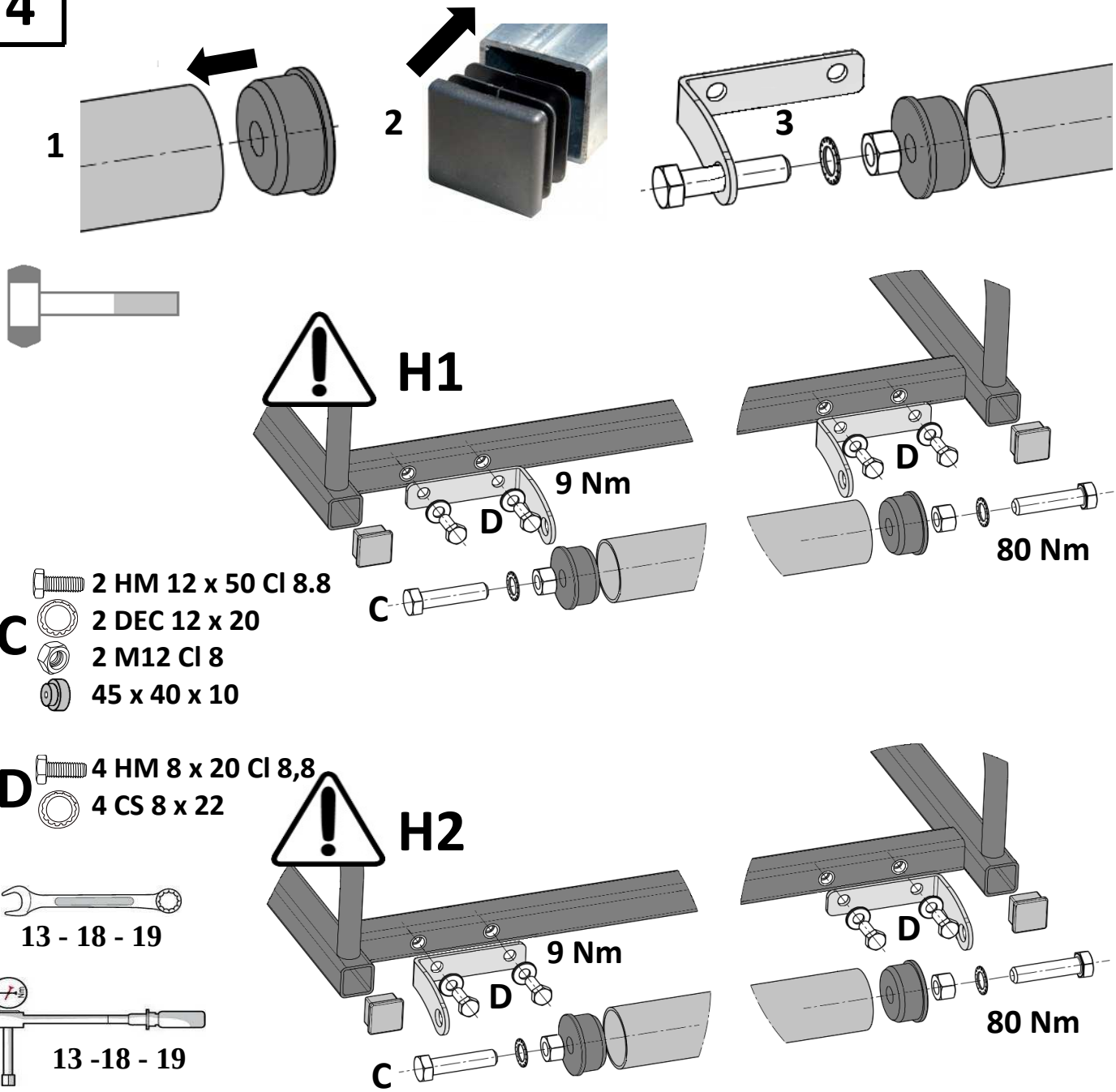
1
2
3
H1
9 Nm
D
C
D
80 Nm
2 HM 12 x 50 Cl 8.8
C
2 DEC 12 x 20
2 M12 Cl 8
45 x 40 x 10
D
4 HM 8 x 20 Cl 8,8
4 CS 8 x 22
H2
13 - 18 - 19
13 -18 - 19
9 Nm
D
C
D
80 Nm

5

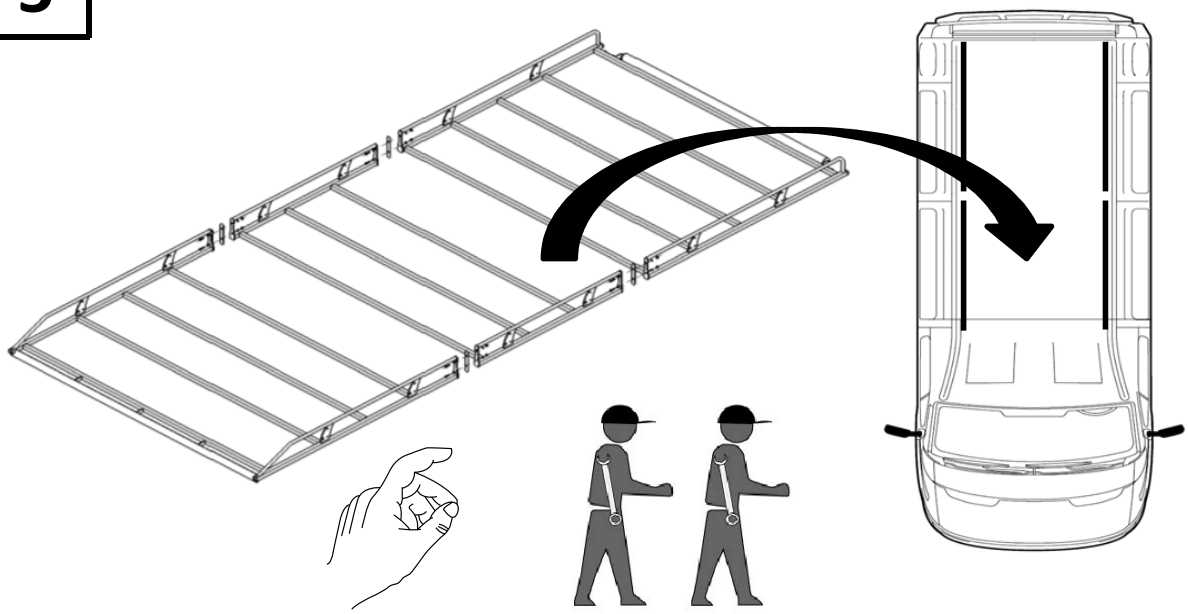

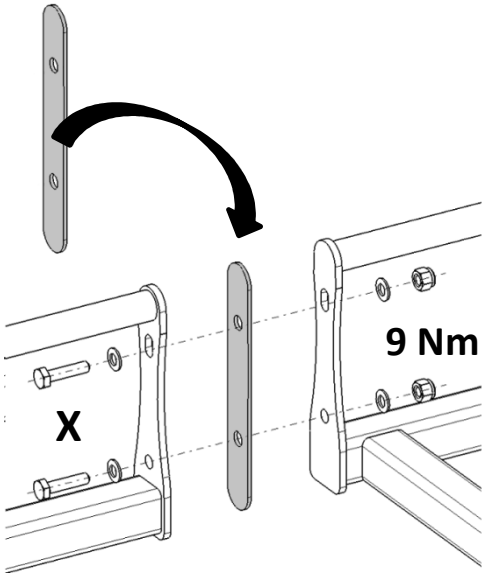
X
9 Nm

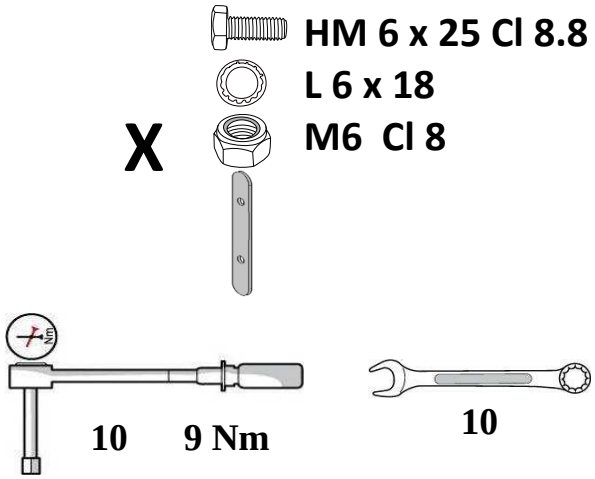
X
HM 6 x 25 Cl 8.8
L 6 x 18
M6 Cl 8
10
9 Nm
10

6

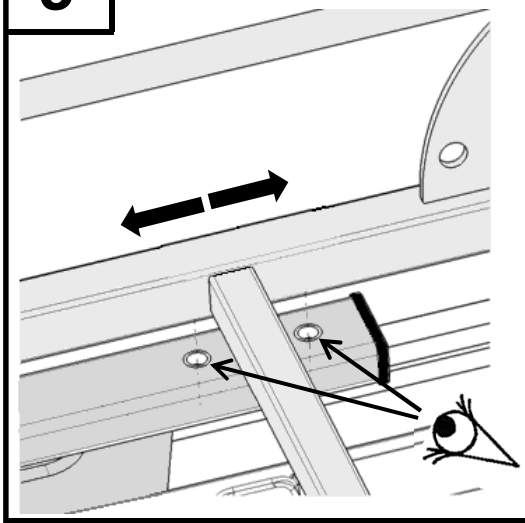

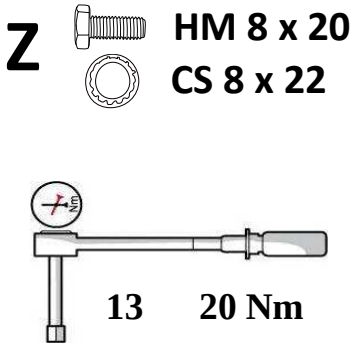
Z
HM 8 x 20
CS 8 x 22
13
20 Nm

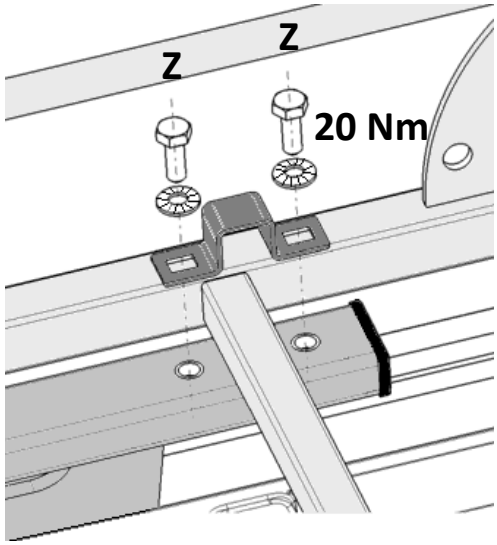
Z
Z
20 Nm

7

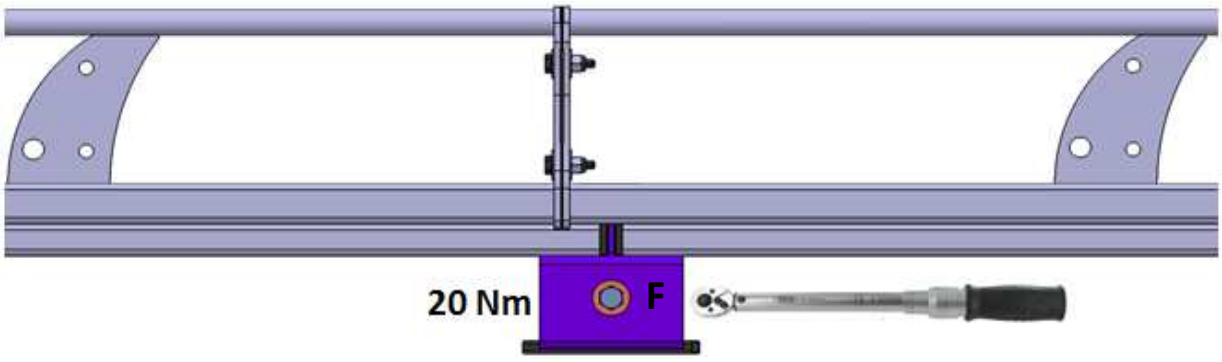
20 Nm
F

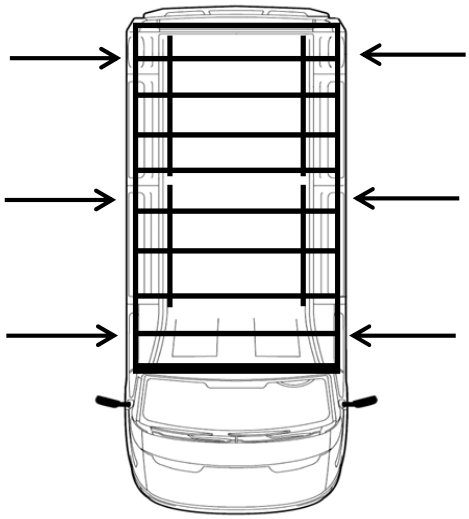

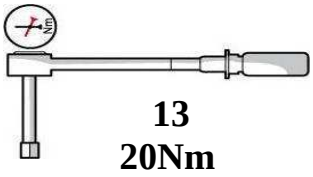
13
20Nm